CARUSO MIDDLE SCHOOL

517 DEERFIELD RD. DEERFIELD, ILLINOIS 60015

ACM EXTERIOR SHOP DRAWINGS

ARCHITECT

GREEN ASSOCIATES
1437 Harmony Ct, Itasca, IL 60143

CONTRACTOR

Happ Builders
28 Le Baron Street
Waukegan, IL 60085

Subcontractor

Johns Architectural Metal Solutions Inc
800 E Porter St
Crown Point, IN 46307

GENERAL NOTES:

1. ALL DIMENSIONS TO BE FIELD VERIFIED PRIOR TO FABRICATION RELEASE.
2. CUSTOM WIDTH COIL TO BE ORDERED BASED ON PANEL AND WINDOW DIMENSIONS INDICATED ON THESE SHOP DRAWINGS.

SYMBOLS

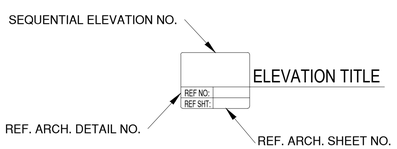

ELEVATION INDICATOR

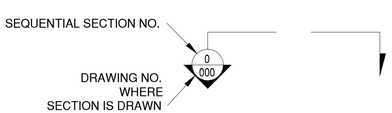

SECTION INDICATOR

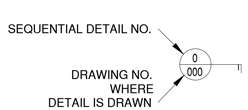

DETAIL INDICATOR

ABBREVIATIONS

ALUM.	ALUMINUM
APPROX.	APPROXIMATELY
ARCH.	ARCHITECT
C.L. or ℄	CENTERLINE
CONT.	CONTINUOUS
DIA.	DIAMETER
D.L.O.	DAYLIGHT OPENING
D.O.	DOOR OPENING
F.H.	FRAME HEIGHT
F.W.	FRAME WIDTH
GYP. BD.	GYPSUM BOARD
HORIZ.	HORIZONTAL
I.D.	INSIDE DIAMETER
MAX.	MAXIMUM
MIN.	MINIMUM
N.B.P.	NOT BY PITTCO
N.T.S.	NOT TO SCALE
O.C.	ON CENTER
O.D.	OUTSIDE DIAMETER
O.H.	OPPOSITE HAND
REF.	REFERENCE
REQ'D.	REQUIRED
R.O.	ROUGH OPENING
SIM.	SIMILAR
TYP.	TYPICAL
U.N.O.	UNLESS NOTED OTHERWISE
V.B.A.	VERIFY BY ARCHITECT
V.I.F.	VERIFY IN FIELD
VERT.	VERTICAL

SYSTEM INFORMATION

PANEL SYSTEM: RS 3000

MP-1
JAM PANEL - ACM - 4MM, FR CORE
FINISH: CUSTOM DEERFIELD BLUE

GREEN GIRT 2 AND 1 SYSTEM WITH RIGID INSULATION

DESIGN CRITERIA

- DESIGN WINDLOAD EXTERIOR WALLS:
  TYP. ZONE -
  CORNER ZONE -
- DESIGN WINDLOAD INTERIOR WALLS:
  TYP. ZONE -

DRAWING INDEX

SHEET A00	COVER SHEET
SHEET A01	LEVEL 1 ELEVATIONS
SHEET A02	LEVEL 2 ELEVATIONS
SHEET A03	ENLARGED ELEVATIONS
SHEET A04	ENLARGED ELEVATIONS
SHEET A20	DETAILS
SHEET A21	DETAILS
SHEET A22	DETAILS
SHEET A30	RENDERINGS

No.	Description	Date

Johns Architectural Metal Solutions Inc.

Project Address
517 Deerfield Rd

Project number
22.4.15

PROJECT NAME
Auditorium Renovation and Additions

ARCHITECT
GREEN ASSOCIATES

CONTRACTOR
HAPP BUILDERS

DESCRIPTION
Project Information

SUBMITTAL

DATE 28/05/2022 01:08:39

DRAWN
Author

DATE
Issue Date

SCALE

SHEET NO.
A00

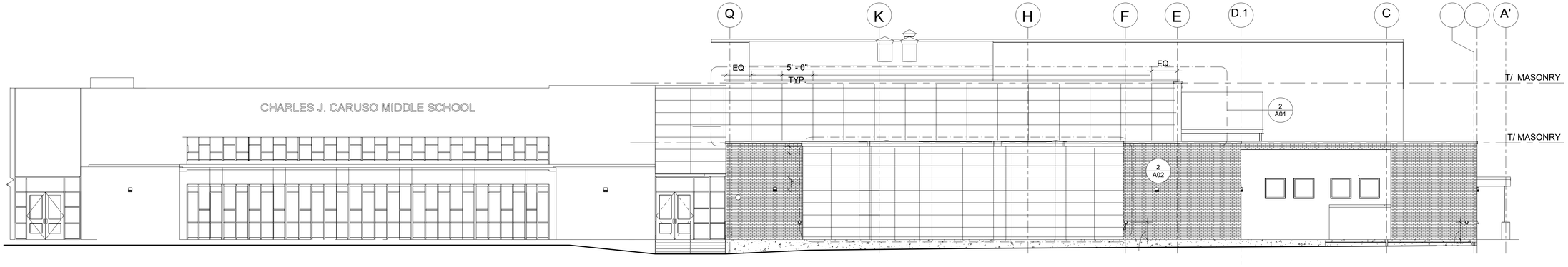

1 East Elevation
1/8" = 1'-0"

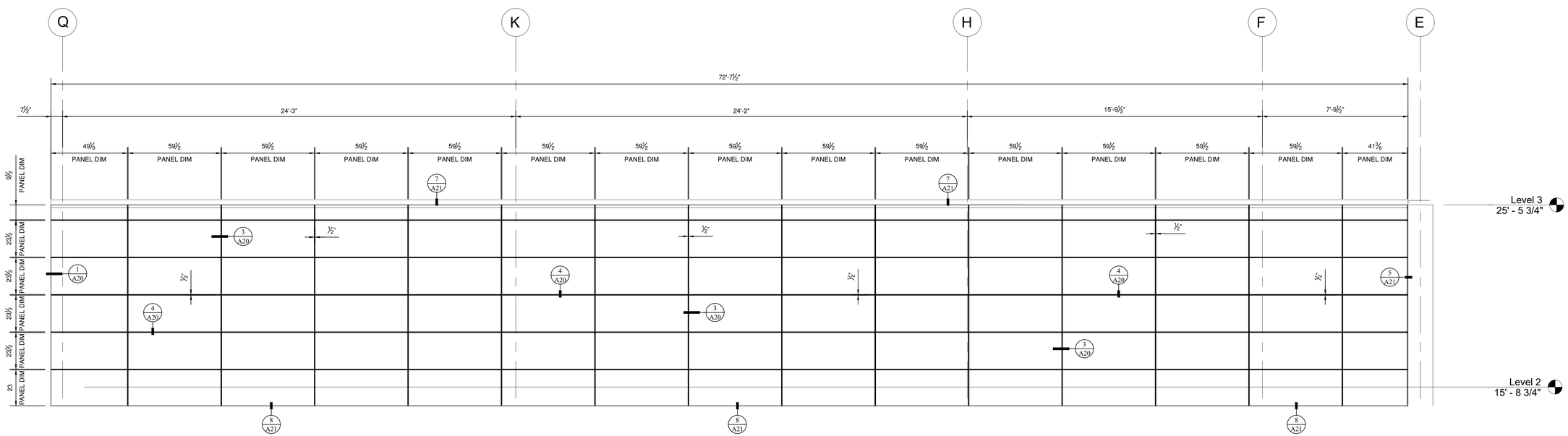

2 East Elevation - Level 2
3/8" = 1'-0"

No.	Description	Date

Johns Architectural Metal Solutions Inc.

Project Address
517 Deerfield Rd

Project number
22.4.15

PROJECT NAME
Auditorium Renovation and Additions

ARCHITECT
GREEN ASSOCIATES

CONTRACTOR
HAPP BUILDERS

DESCRIPTION
Level 2 - East Elevation

SUBMITTAL

DATE 28/05/2022 01:09:03

DRAWN
Author

DATE
Issue Date

SCALE

SHEET NO.
A01

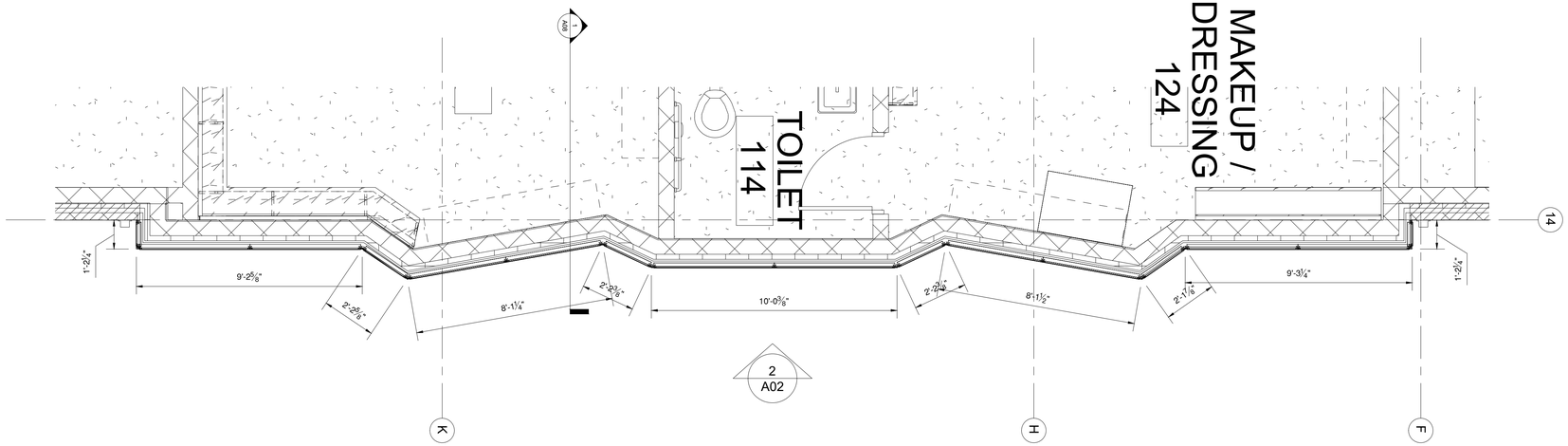

1 Level 1
1/4" = 1'-0"

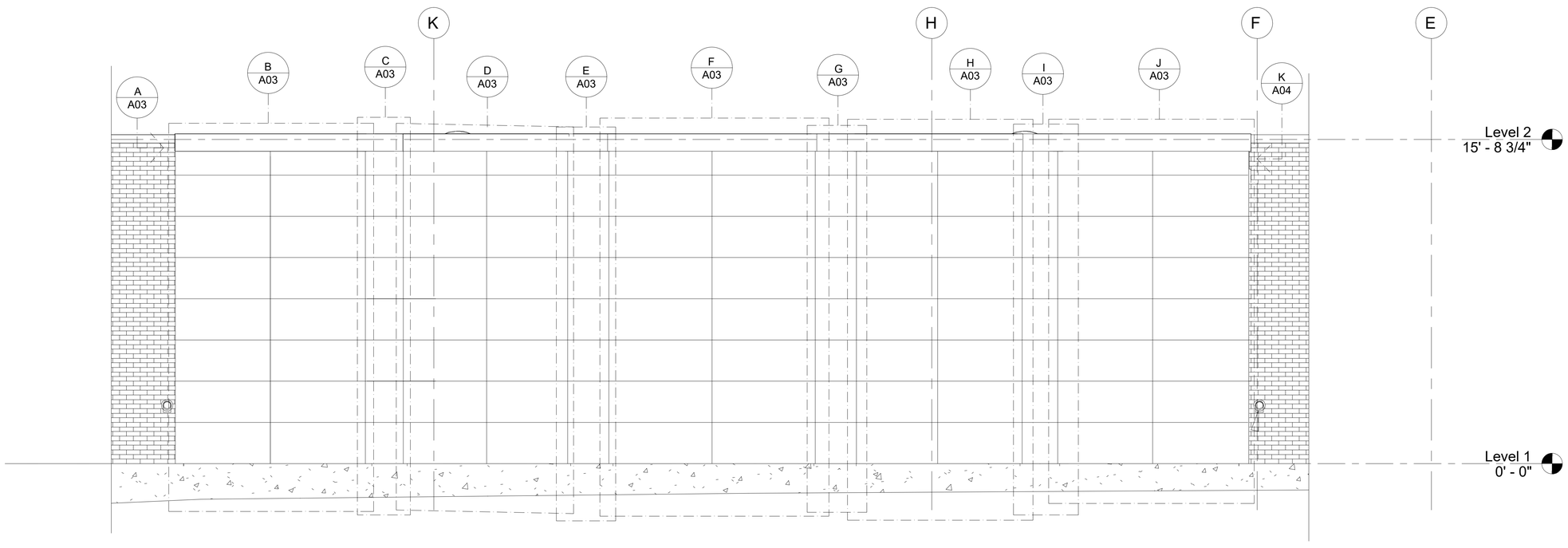

2 Level 1 - Elevation
1/2" = 1'-0"

No.	Description	Date

Johns Architectural Metal Solutions Inc.

PROJECT NAME
Auditorium Renovation and Additions

Project Address
517 Deerfield Rd

Project number
22.4.15

ARCHITECT
GREEN ASSOCIATES

CONTRACTOR
HARP BUILDERS

DESCRIPTION
Floorplan - Level 1
Elevation - Level 1

SUBMITTAL

DATE 28/05/2022 01:08:41

DRAWN
Author

DATE
Issue Date

SCALE

SHEET NO.
A02

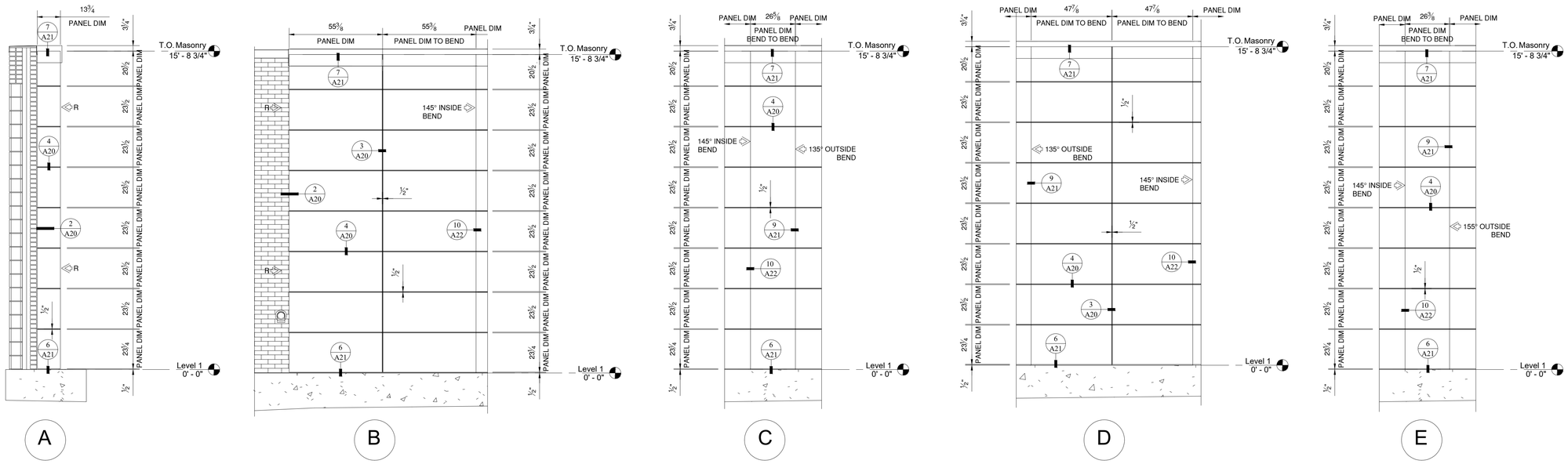

1 East Enlarged Elevations
3/8" = 1'-0"

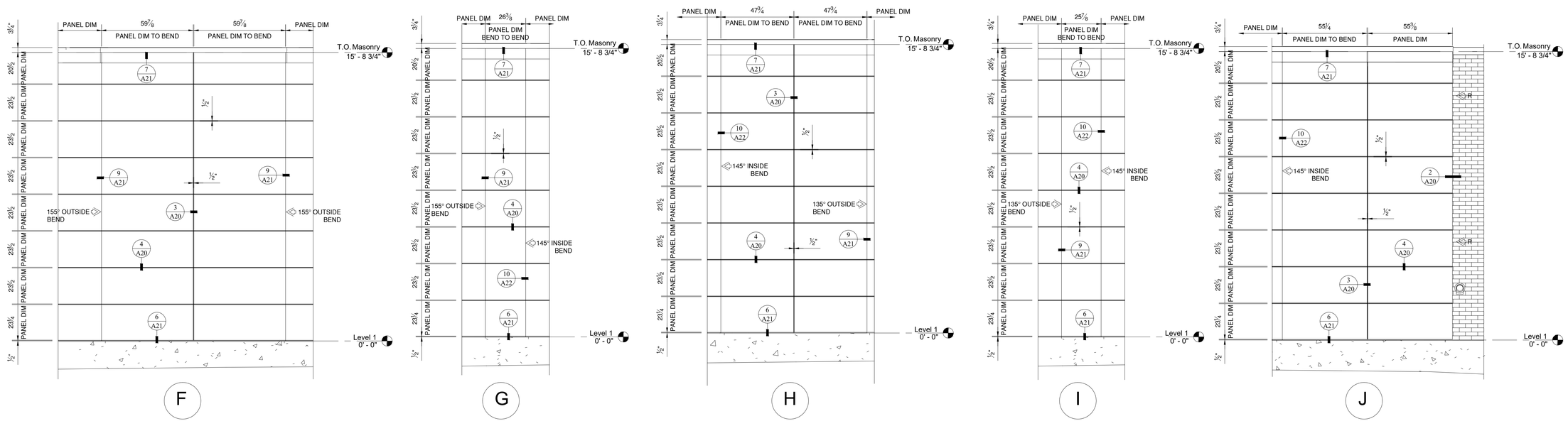

2 East Enlarged Elevations
3/8" = 1'-0"

No.	Description	Date

Johns Architectural Metal Solutions Inc.

Project Address
517 Deerfield Rd

Project number
22.4.15

PROJECT NAME
Auditorium Renovation and Additions

ARCHITECT
GREEN ASSOCIATES

CONTRACTOR
HAPP BUILDERS

DESCRIPTION
Level 1 Enlarged East Elevation

SUBMITTAL

DATE 28/05/2022 01:09:03

DRAWN
Author

DATE
Issue Date

SCALE

SHEET NO.
A03

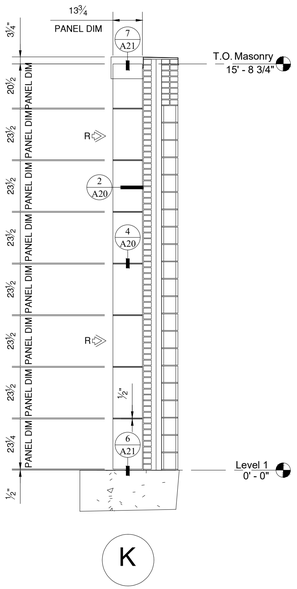

1 East Enlarged Elevations
3/8" = 1'-0"

No.	Description	Date

Johns Architectural Metal Solutions Inc.

PROJECT NAME
Auditorium Renovation and Additions

Project Address
517 Deerfield Rd

Project number
22.4.15

ARCHITECT
GREEN ASSOCIATES

CONTRACTOR
HAPP BUILDERS

DESCRIPTION
East Elevation

SUBMITTAL

DATE 28/05/2022 01:09:03

DRAWN
Author

DATE
Issue Date

SCALE

SHEET NO.
A04

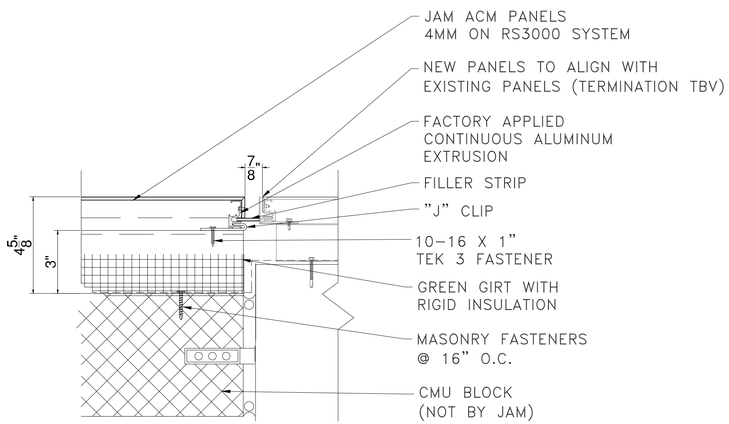

1 EXISTING TO NEW PANEL TRANSITION

SCALE: N.T.S.

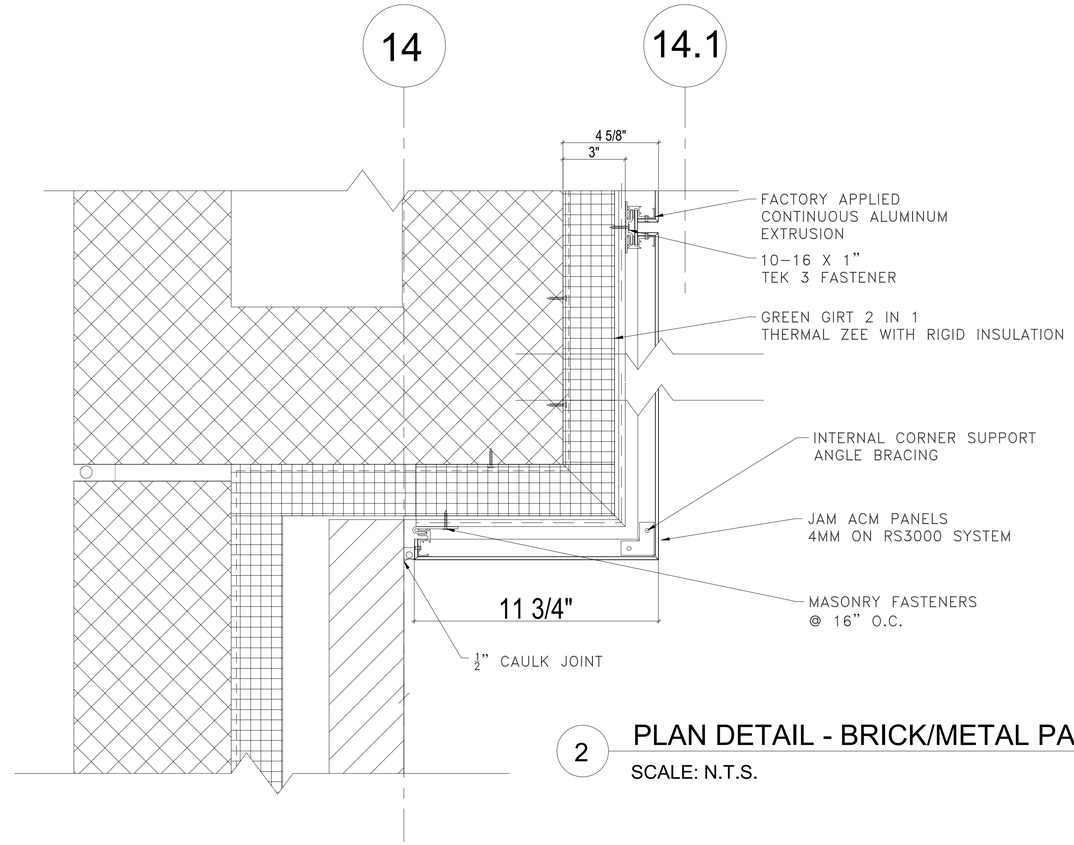

2 PLAN DETAIL - BRICK/METAL PANEL

SCALE: N.T.S.

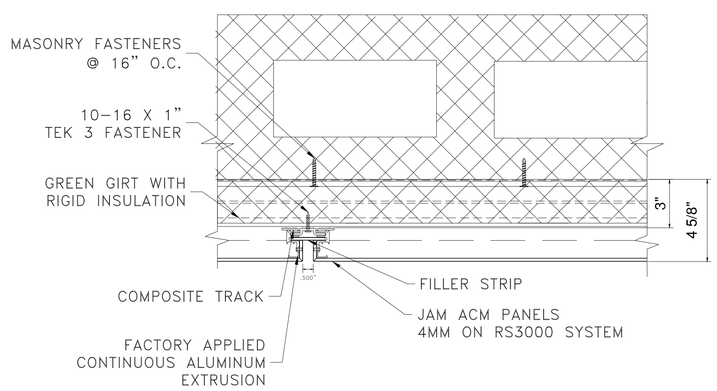

3 TYPICAL VERTICAL JOINT

SCALE: N.T.S.

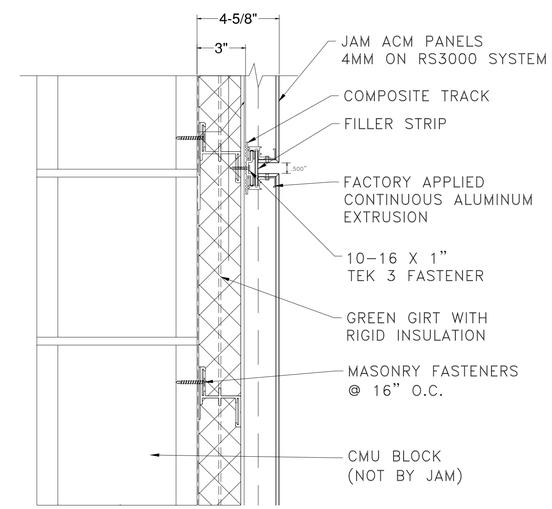

4 TYPICAL HORIZONTAL JOINT

SCALE: N.T.S.

No.	Description	Date

Johns Architectural Metal Solutions Inc.

Project Address
517 Deerfield Rd

Project number
22.4.15

PROJECT NAME
Auditorium Renovation and Additions

ARCHITECT
GREEN ASSOCIATES

CONTRACTOR
HARP BUILDERS

DESCRIPTION
Details

SUBMITTAL

DATE 28/05/2022 01:09:10

DRAWN
Author

CHK'D
Issue Date

SCALE

SHEET NO.
A20

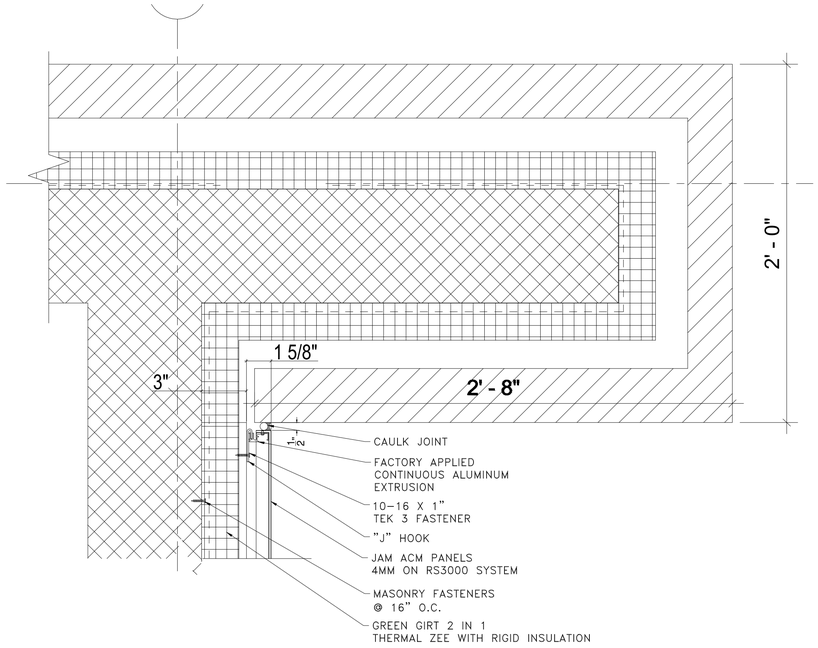

5 PLAN DETAIL @ PANEL TERMINATION

SCALE: N.T.S.

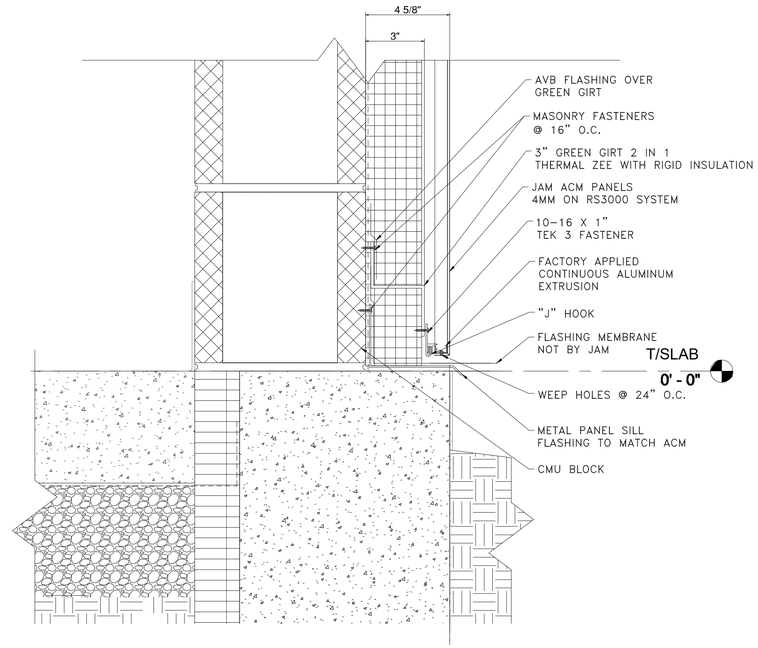

6 SILL DETAIL @ WALL TYPICAL

SCALE: N.T.S.

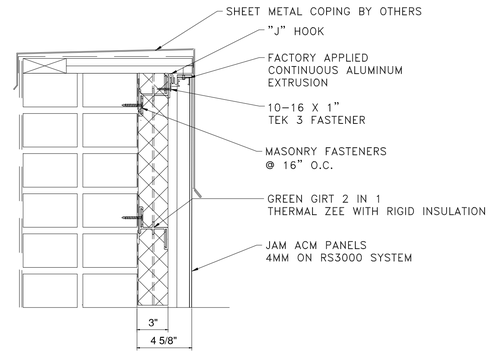

7 PARAPET DETAIL

SCALE: N.T.S.

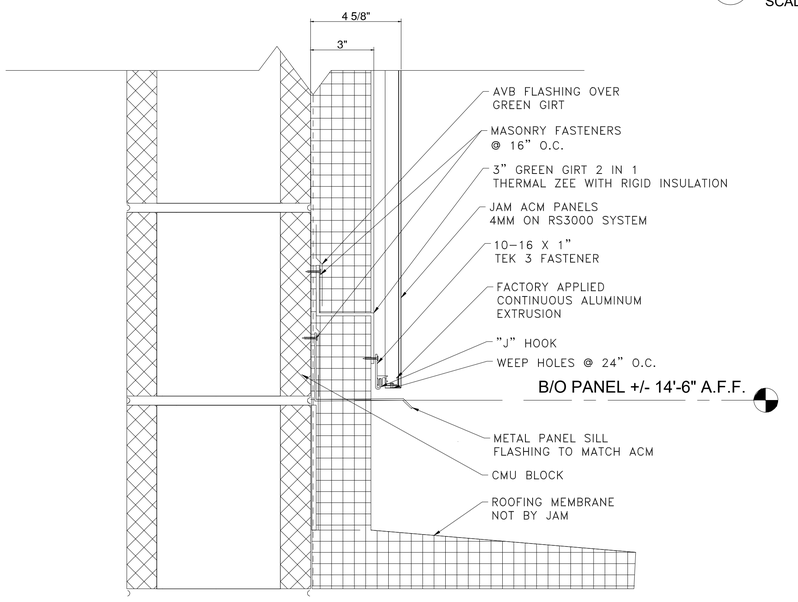

8 SILL DETAIL @ ROOF

SCALE: N.T.S.

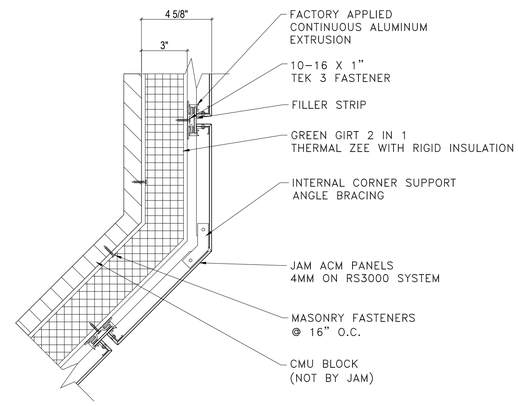

9 PLAN DETAIL - METAL PANEL OUTSIDE CORNER

SCALE: N.T.S.

No.	Description	Date

Johns Architectural Metal Solutions Inc.

PROJECT NAME
Auditorium Renovation and Additions

Project Address
517 Deerfield Rd

Project number
22.4.15

ARCHITECT
GREEN ASSOCIATES

CONTRACTOR
HAPP BUILDERS

DESCRIPTION
Details

SUBMITTAL

DATE 28/05/2022 01:09:09

DRAWN
Author

DATE
Issue Date

SCALE

SHEET NO.
A21

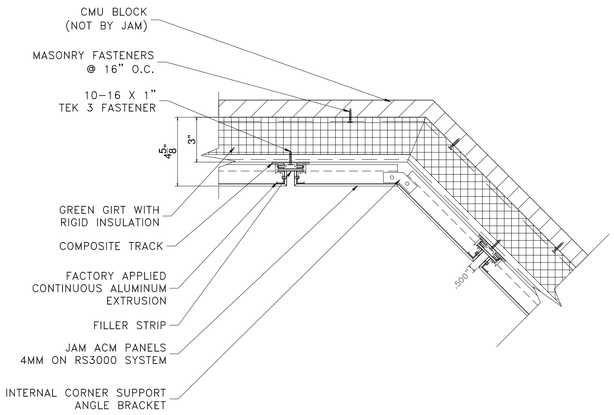

10 PLAN DETAIL - METAL PANEL INSIDE CORNER

SCALE: N.T.S.

No.	Description	Date

Johns Architectural Metal Solutions Inc.

Project Address
517 Deerfield Rd

PROJECT NAME
Auditorium Renovation and Additions

Project number
22.4.15

ARCHITECT
GREEN ASSOCIATES

CONTRACTOR
HAPP BUILDERS

DESCRIPTION
Details

SUBMITTAL

DATE 28/05/2022 01:09:09

DRAWN
Author

DATE
Issue Date

SCALE

SHEET NO.
A21

No.	Description	Date

Johns Architectural Metal Solutions Inc.

Project Address
517 Deerfield Rd

Project number
22.4.15

PROJECT NAME
Auditorium Renovation and Additions

PROJECT
BIM

CONTRACTOR
CHART

DESCRIPTION
3D Renderings

COMMENTS

DATE
20/04/2022 00:50:40

AUTHOR
Author

Issue Date

SCALE

SHEET NO.
A30